A75 Clip

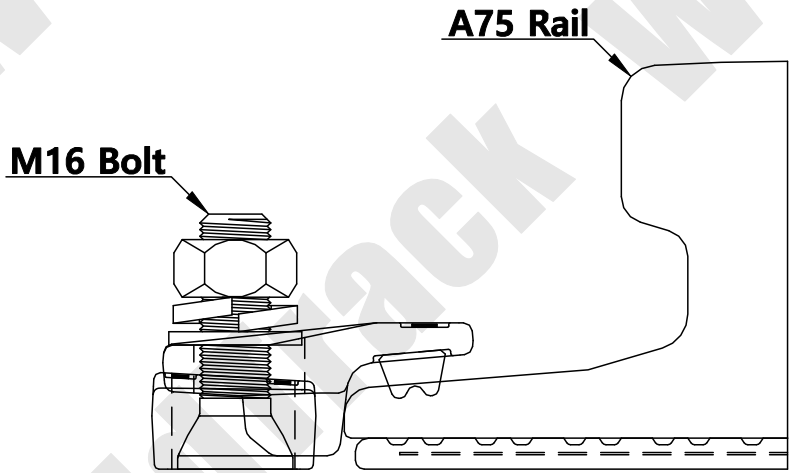

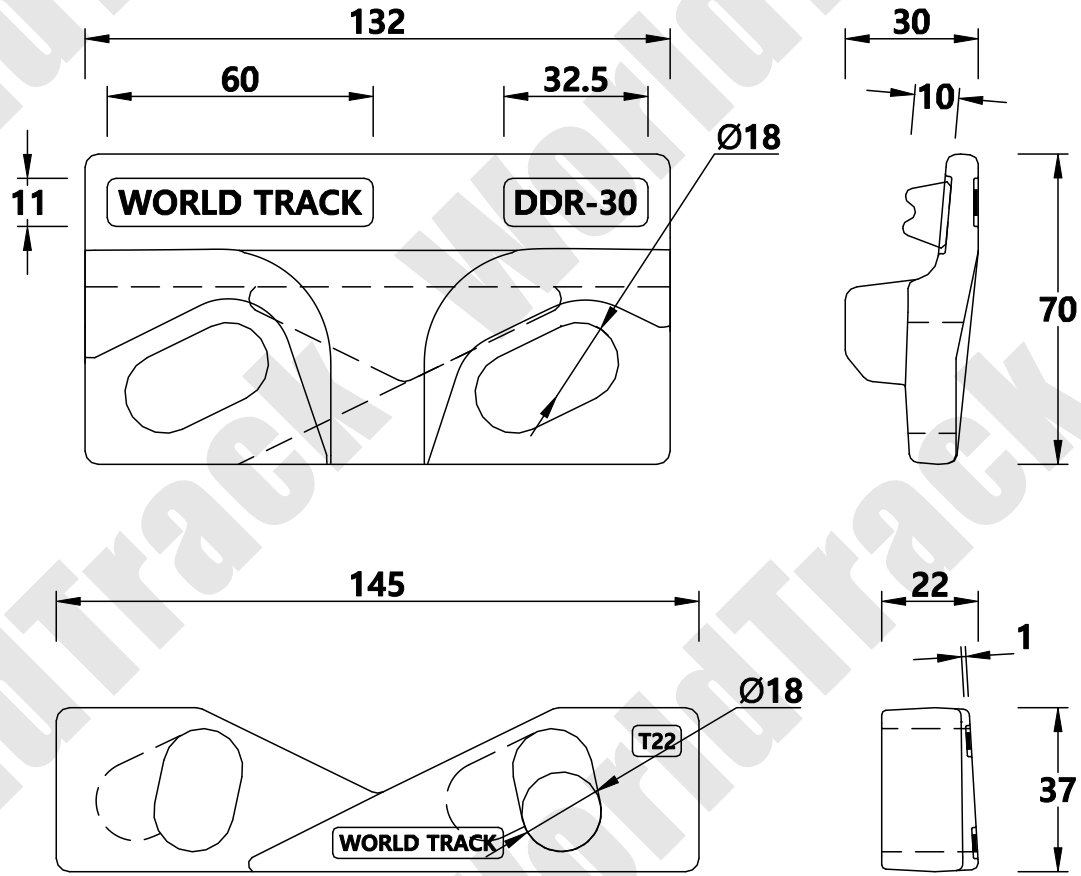

WORLD TRACK THE TECHNICAL DATA CONTAINED IN THIS DRAWING IS PROPERTY OF WORLD TRACK LIMITED AND IS SUBJECT TO COPYRIGHT	WORLD TRACK TEL : 82)2-2605-2380 FAX : 82)2-2601-2382 http://www.world-track.net E-Mail: world-track@hanmail.net	Clip Designation	75/DDR-PY-T2/3022
		Clip Type	Double Double Rubber
		Fixing Method	Bolted Clip
		Accessory List Clip(상), Clip(하) / Rubber Bolt / Nut / Spring Washer / Washer	

Drawing Number	C/DDR-135	
Checked By	Lee Se Wan	
Date	2016 / 02 / 29	
Scale	1 / 1	A4
ANGLE PROJECTION		

WorldTrack